Early Journal Content on JSTOR, Free to Anyone in the World

This article is one of nearly 500,000 scholarly works digitized and made freely available to everyone in the world by JSTOR.

Known as the Early Journal Content, this set of works include research articles, news, letters, and other writings published in more than 200 of the oldest leading academic journals. The works date from the mid-seventeenth to the early twentieth centuries.

We encourage people to read and share the Early Journal Content openly and to tell others that this resource exists. People may post this content online or redistribute in any way for non-commercial purposes.

Read more about Early Journal Content at http://about.jstor.org/participate-jstor/individuals/early-journal-content.

JSTOR is a digital library of academic journals, books, and primary source objects. JSTOR helps people discover, use, and build upon a wide range of content through a powerful research and teaching platform, and preserves this content for future generations. JSTOR is part of ITHAKA, a not-for-profit organization that also includes Ithaka S+R and Portico. For more information about JSTOR, please contact support@jstor.org.

A STONE RUIN AT SË-T̃SAK, GUATEMALA

By ROBERT BURKITT

This brief description and the accompanying diagrams are of a stone ruin at Së-t̃sak, in the land of Sepacuité, about four leagues east of the village of Senahú, province of Alta Vera Paz, Guatemala, which was visited by the writer in 1896. The ruin blocks the summit of a narrow pass, and the woods in the immediate vicinity are of old growth, and not pines. The western approach, which is very steep, is cut square across by the outlying wall, at A in plate IV and figure 3. This wall, or stair, lies due north and south, or very nearly, and forms the edge of a sort of terrace behind the main

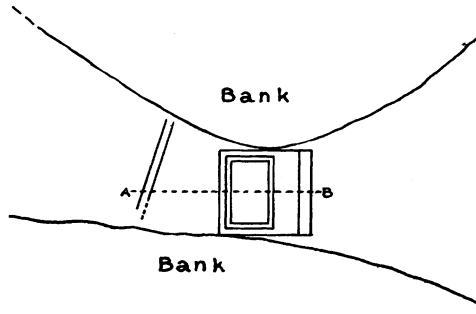

FIG. 3. — Situation of the ruin.

structure. The main structure is not parallel with that wall, but faces the opening of the wall on the other side; the pass shifts round at the top, as indicated in the figure. The banks are steep on both hands and abut against the sides of the structure to the height of the first platform, as shown by the profile L, M, in plate IV. At the front corners the space left between the receding bank and the side of the structure, on each hand, is filled across with tiers of stone, now covered with rubbish and not shown in the drawings.

The front of the ruin is sunk toward the middle, and the size of the steps is averaged. The front view of the main structure in outline, restored, is shown in plate V. The point of view is P, shown on the plan (pl. IV), fifteen feet from the base, on a line with the

side, and level with the top (c), the center of perspective — to be four inches from the eye.

The stone of which the structure is built is limestone, and not hard. Squared stones are found only in the front, or easterly side, of the ruin, where the stones are larger than in other parts. The largest are not more than two and one-half feet long. No mortar was used. The interior was not explored. The back terraces appear to have been paved, at least along the foot of the main structure. The stair behind was probably much deeper than the present surface at A.

Measurements (in English feet)

Main structure.	Eastern side:	Total height, near B	14.2
		Length from north to south	37
		Width from east to west upper surface.	35.3
		Height of lower terrace	2.2
		Height of four upper terraces	3
		Breadth of terraces	1.3
		Length of steps	9
		Height of steps	1.5
		Breadth of steps	.65
	Western side:	Height	6.5
		Base of main structure to western steps near A	29.5
		Height of two corner steps	2
		Height of third step	3
		Height of upper step	2
		From eastern end of main structure to base of upper structure	10.7
		From western end of main structure to base of upper structure	3.8
		From northern and southern banks to base of upper structure	3
	Upper structure:	Length of lower platform	31
		Width of lower platform	20.8
		Height of lower platform	4.8
		Length of upper platform	26
		Width of upper platform	15.7
		Height of upper platform	2
		Width of terrace around base of upper platform	2.5
Total height of ruin, eastern side			21
Total height of ruin, western side			11.5

SENAHÚ,
GUATEMALA.

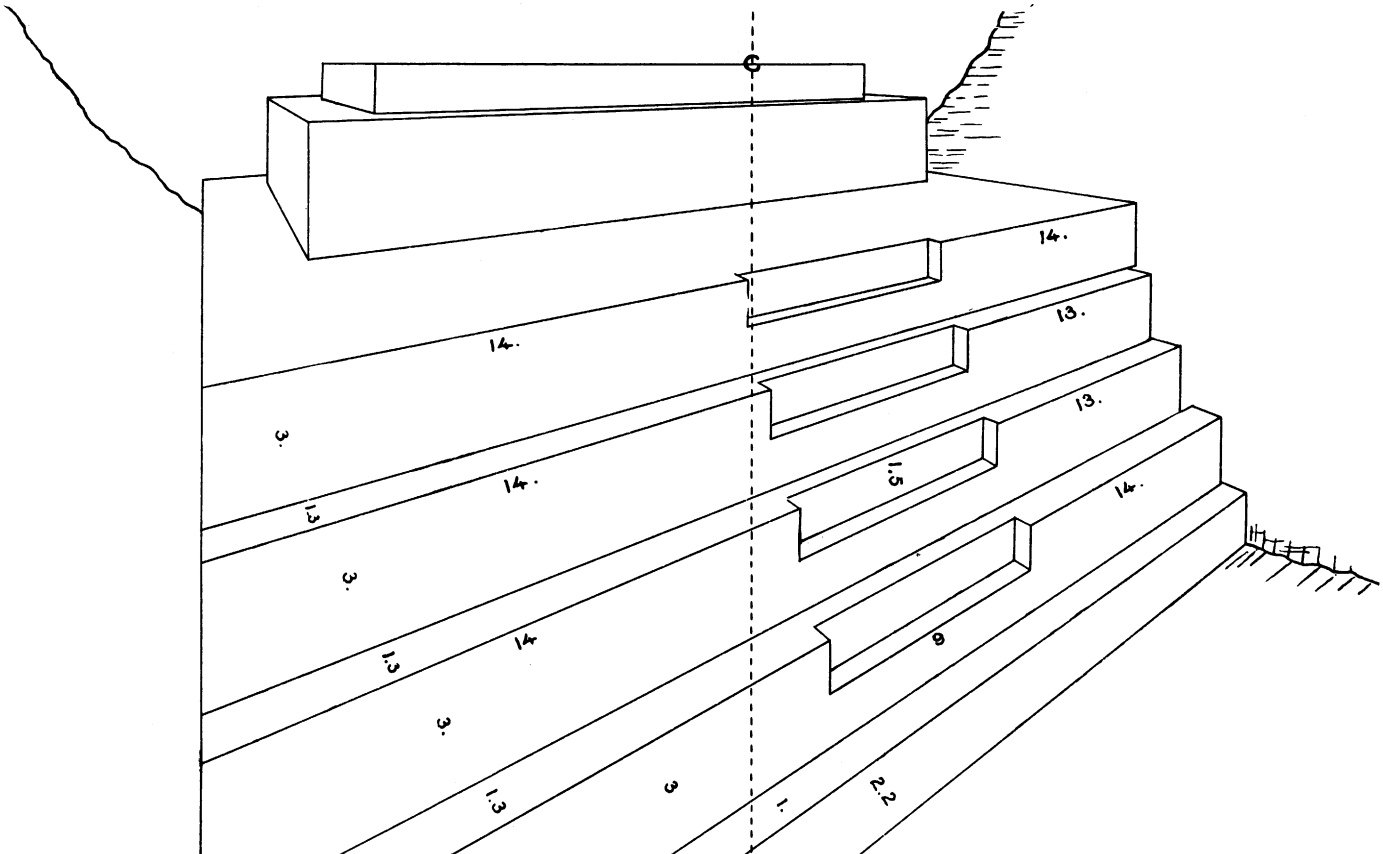

FRONT VIEW OF THE MAIN STRUCTURE AT SË-T̃SAK, IN OUTLINE, RESTORED